SUNPOWER™

E19 / 240 SOLAR PANEL

MAXIMUM EFFICIENCY AND PERFORMANCE

BENEFITS

Highest Efficiency
SunPower™ Solar Panels are the most efficient photovoltaic panels on the market today.

More Power
Our panels produce more power in the same amount of space—up to 50% more than conventional designs and 100% more than thin film solar panels.

Reduced Installation Cost
More power per panel means fewer panels per install. This saves both time and money.

Reliable and Robust Design
Proven materials, tempered front glass, and a sturdy anodized frame allow panel to operate reliably in multiple mounting configurations.

SPR-240E-WHT-D

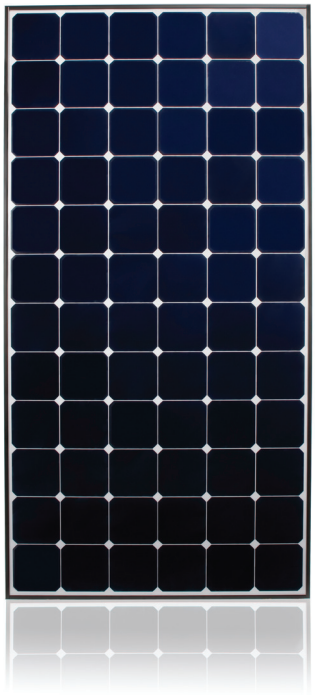

E19 SERIES

The SunPower™ 240 Solar Panel provides today's highest efficiency and performance. Utilizing 72 all back-contact solar cells, the SunPower 240 delivers a total panel conversion efficiency of 19.3%. The panel's reduced voltage-temperature coefficient, anti-reflective glass and exceptional low-light performance attributes provide outstanding energy delivery per peak power watt.

SunPower's High Efficiency Advantage

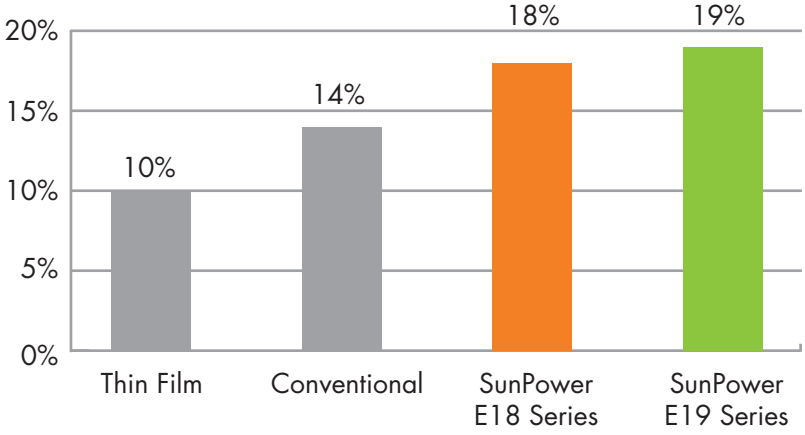

c UL us

SUNPOWER™

E19 / 240 SOLAR PANEL

MAXIMUM EFFICIENCY AND PERFORMANCE

Electrical Data

Measured at Standard Test Conditions (STC): irradiance of 1000W/m², AM 1.5, and cell temperature 25° C

Peak Power (+5/-3%)	P_{max}	240 W
Efficiency	η	19.3 %
Rated Voltage	V_{mpp}	40.5 V
Rated Current	I_{mpp}	5.93 A
Open Circuit Voltage	V_{oc}	48.6 V
Short Circuit Current	I_{sc}	6.30 A
Maximum System Voltage	UL	600 V
Temperature Coefficients	Power (P)	-0.38% / K
	Voltage (V_{oc})	-132.5mV / K
	Current (I_{sc})	3.5mA / K
NOCT		45° C +/-2° C
Series Fuse Rating		20 A

I-V Curve

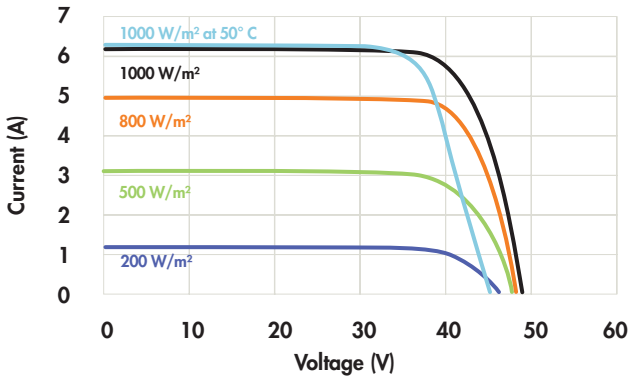

Current/voltage characteristics with dependence on irradiance and module temperature.

Mechanical Data

Solar Cells	72 SunPower all-back contact monocrystalline
Front Glass	High transmission tempered glass with anti-reflective (AR) coating
Junction Box	IP-65 rated with 3 bypass diodes Dimensions: 32 x 155 x 128 (mm)
Output Cables	1000mm length cables / MultiContact (MC4) connectors
Frame	Anodized aluminum alloy type 6063 (black)
Weight	33.1 lbs. (15.0 kg)

Tested Operating Conditions

Temperature	-40° F to +185° F (-40° C to + 85° C)
Max load	113 psf 550kg/m² (5400 Pa) front – e.g. snow; 50 psf 245kg/m² (2400 Pa) front and back – e.g. wind
Impact Resistance	Hail 1 in (25 mm) at 52mph (23 m/s)

Warranties and Certifications

Warranties	25 year limited power warranty
	10 year limited product warranty
Certifications	Tested to UL 1703. Class C Fire Rating

Dimensions

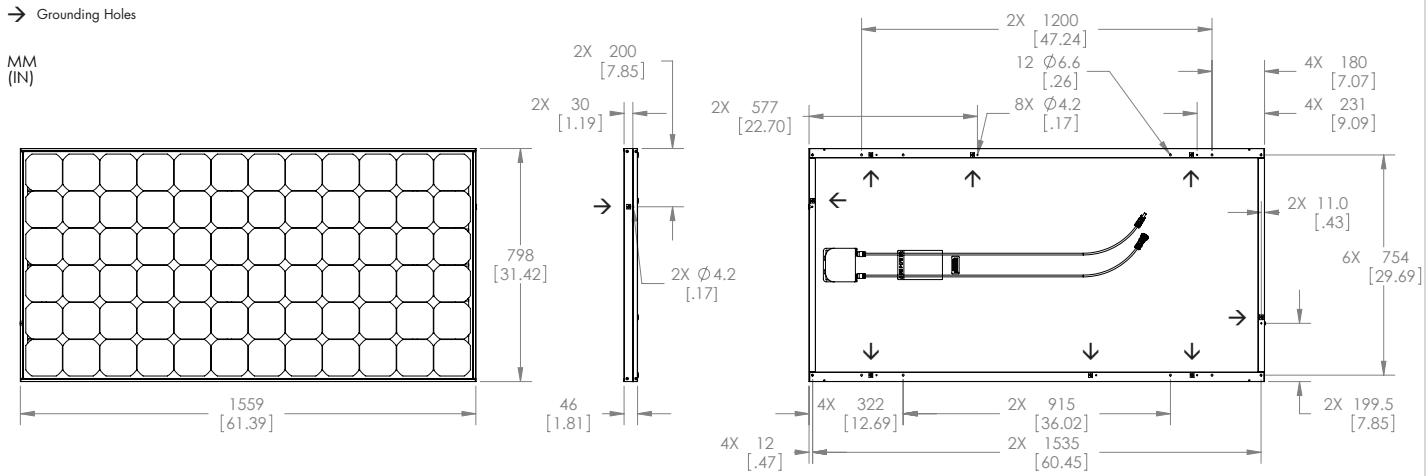

CAUTION: READ SAFETY AND INSTALLATION INSTRUCTIONS BEFORE USING THE PRODUCT.

Visit sunpowercorp.com for details

SUNPOWER and the SUNPOWER logo are trademarks or registered trademarks of SunPower Corporation.
© November 2010 SunPower Corporation. All rights reserved. Specifications included in this datasheet are subject to change without notice.

sunpowercorp.com

Document #001-65327 Rev** / LTR_EN